WG229 IoT WLAN Module Datasheet

Document Information	
Title	WG229 IoT WLAN Module Datasheet
Document type	Datasheet
Document number	SL-19040121
Revision and date	V1.02 13-Aug-2019
Disclosure restriction	Public

SKYLAB reserves all rights to this document and the information contained herein. Products, names, logos and designs described herein may in whole or in part be subject to intellectual property rights. Reproduction, use, modification or disclosure to third parties of this document or any part thereof without the express permission of SKYLAB is strictly prohibited.

The information contained herein is provided “as is” and SKYLAB assumes no liability for the use of the information. No warranty, either express or implied, is given, including but not limited, with respect to the accuracy, correctness, reliability and fitness for a particular purpose of the information. This document may be revised by SKYLAB at any time. For most recent documents, visit www.skylab.com.cn.

Copyright © 2019, Skylab M&C Technology Co., Ltd.

SKYLAB® is a registered trademark of Skylab M&C Technology Co., Ltd in China

Contents

1 General Description....4
2 Applications....5
3 Features....5
4 Application Block Diagram....5
5 Module Pinout and Pin Description....6
5.1 Module Pinout....6
5.2 Pin Description....7
5.3 Strapping Pins....7
6 Interfaces....8
6.1 GPIO....8
6.2 I2C....8
6.3 I2S....8
6.4 UART....8
6.5 SDIO....8
6.6 SPI(Master/Slave)....9
6.7 SPI(Slave)....9
6.8 HSPI(Slave)....9
6.9 PWM....10
6.10 IR Remote....10
7 PCB Footprint and Dimensions....11
8 Electrical Characteristics....11
8.1 Absolute Maximum Ratings....11
8.2 Recommended Operation Ratings....12
8.3 Measurement Conditions....12
9. Performance Specification....13
10 Reference Schematics....14
10.1 Power Schematic....14
10.2 USB-UART Schematic....15
10.3 Typical Schematic....15
11 Hardware Boot Mode....16
12 Manufacturing Process Recommendations....16
13 Ordering Information....17
14 Packaging Specification....17
15 Revision History....18
16 Contact Information....18

1 General Description

The Wi-Fi Module is a small form-factor, single stream, 802.11b/g/n WiFi module with on-board low power application processor. It is a low cost serial WiFi module, support UART-WiFi - Ethernet data transmission.

The has been optimized for client applications in the home, enterprise, smart grid, home automation and control that have lower data rates and transmit or receive data on an infrequent basis. The Wi-Fi Module also enables rapid application development of ultra low power devices with the complete application SW on-chip . This combination makes the Wi-Fi Module an ideal solution for low power automation and sensor solutions because of its high efficiency and low power consumption.

The Wi-Fi Module can be used to design applications using 802.11b/g/n communication protocols. All features are enhanced by a built-in antenna, external antenna connector and an interface port to the carrier board. This interface port includes power supply pins, GPIO ports and UART ports.

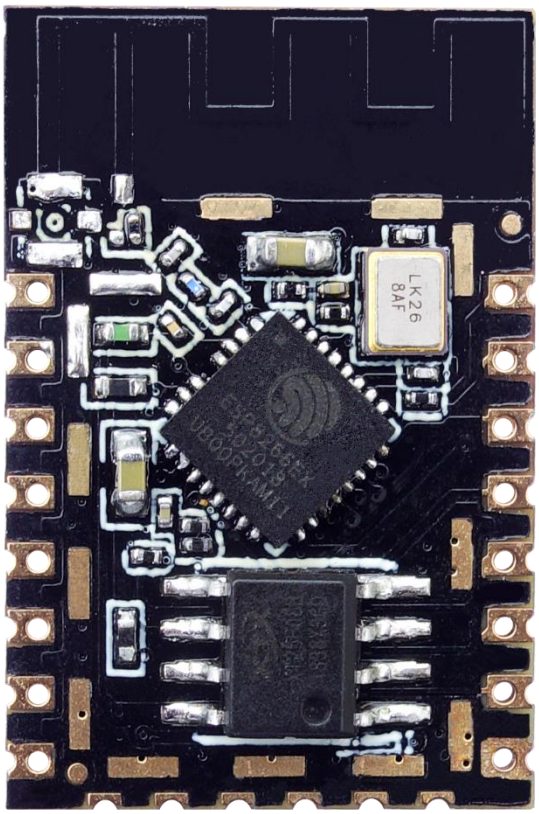

Figure 1: WG229 Top View

2 Applications

- ◆ IoT (internet of things)
- ◆ Network Consumer Device
- ◆ Metering
- ◆ Building Automation
- ◆ Home Automation
- ◆ Smart Home Gateway
- ◆ Smart Lighting
- ◆ Smart Plugs and Lights
- ◆ Baby Monitors
- ◆ Mesh Network
- ◆ Sensor Network
- ◆ Industry Control

3 Features

- ◆802.11 b/g/n/e/i
- ◆802.11 n (2.4 GHz), up to 72.2 Mbps
- ◆802.11 e: QoS for wireless multimedia technology
- ◆AT Set, Cloud Server, App
- ◆A-MPDU and A-MSDU aggregation
- ◆Network Protocols: IPv4, TCP/UDP/HTTP/FTP
- ◆Fragmentation and defragmentation
- ◆Automatic Beacon monitoring/scanning
- ◆802.11 i security features: pre-authentication and TSN
- ◆Wi-Fi Protected Access (WPA)/WPA2/WPA2-Enterprise/Wi-Fi Protected Setup (WPS)
- ◆Infrastructure BSS Station mode/Soft AP mode
- ◆Wi-Fi Direct (P2P), P2P Discovery, P2P Group Owner mode and P2P Power Management
- ◆UMA compliant and certified
- ◆Antenna diversity and selection
- ◆RoHS compliance (Lead-free)
- ◆FCC,CE compliance

4 Application Block Diagram

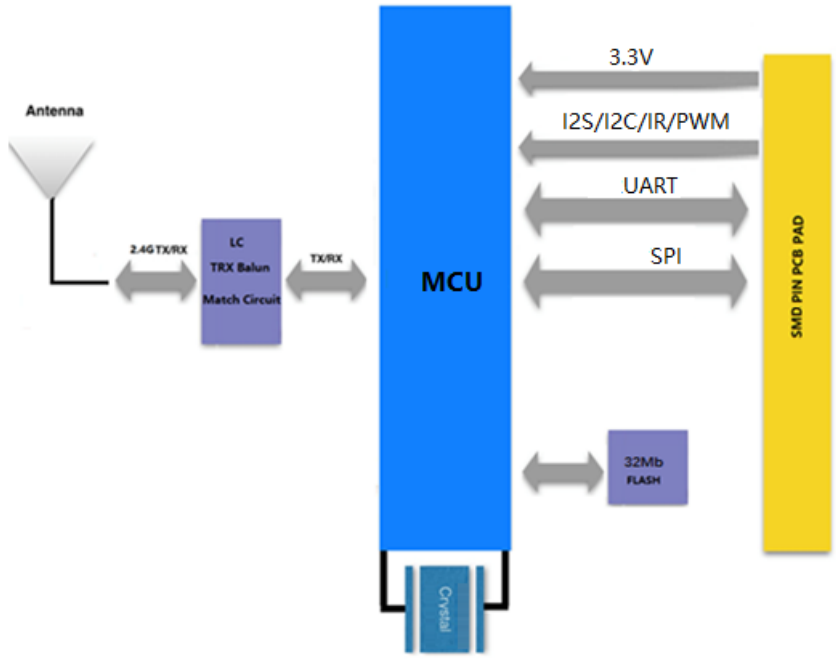

Figure 2: WG229 Block Diagram

5 Module Pinout and Pin Description

5.1 Module Pinout

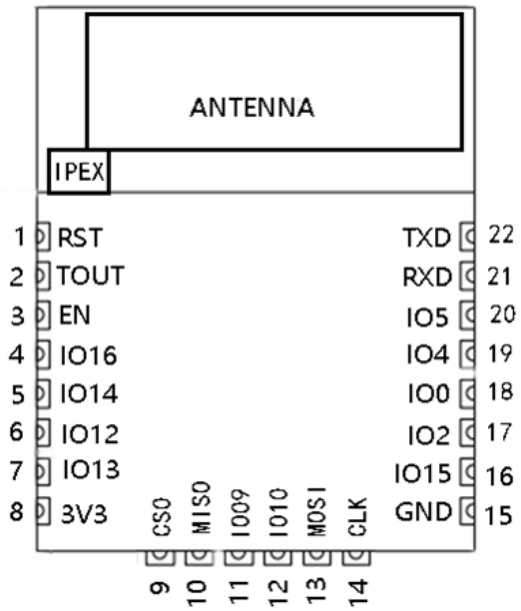

Figure 3: WG229 Pin Packag

5.2 Pin Description

NO	Name	Function
1	RST	Reset Signal (Active Low)
2	TOUT	ADC Pin can be used to check the power voltage of VDD33
3	EN	Chip enable pin. Active high.
4	IO16	GPI16, Deep-Sleep Wakeup
5	IO14	MTMS, GPI14, HSPI_CLK
6	IO12	MTDI, GPI12, HSPI_MISO
7	IO13	MTCK, GPIO13, HSPI_MOSI, UART0_CTS
8	VDD33	3.3 V power supply (VDD)
9	SCS/CMD	GPIO11, SD_CMD, SPI_CS0
10	SDO/SD0	GPIO7, SD_DATA0, SPI_MISO
11	SHD/SD2	GPIO9, SD_DATA2, SPIHD, HSPIHD
12	SWP/SD3	GPIO10, SD_DATA3, SPIWP, HSPIWP
13	SDI/SD1	GPIO8, SD_DATA1, SPI_MOSI
14	SCK/CLK	GPIO6, SD_CLK, SPI_CLK
15	GND	GND
16	IO15	MTDO, GPIO15, HSPI_CS, UART0_RTS
17	IO2	GPIO2, UART TX during flash programming
18	IO0	GPIO0, SPI_CS2
19	IO4	GPIO4
20	IO5	GPIO5
21	RXD0	GPIO3, U0RXD
22	TXD0	GPIO1, U0TXD

5.3 Strapping Pins

has three strapping pins:

- GPIO0: internal pull-up
- GPIO2: internal pull-up
- MTDO/GPIO15: internal pull-down

6 Interfaces

6.1 GPIO

The WG229 has 17 GPIO pins which can be assigned to various functions by programming the appropriate registers. These pins can be multiplexed with other functions such as I2C, I2S, UART, PWM, IR Remote Control, etc.

6.2 I2C

WG229 Pin Number	Pin Name	GPIO	Function Name
5	MTMS	GPIO14	I2C_SCL
17	GPIO2	GPIO2	I2C_SDA

Table6-1: I2C pin share scheme

6.3 I2S

WG229 Pin Number	Pin Name	GPIO	Function Name
6	MTDI	GPIO12	I2SI_DATA
7	MTCK	GPIO13	I2SI_BCK
5	MTMS	GPIO14	I2SI_WS
16	MTDO	GPIO15	I2SO_BCK
21	RXD0	GPIO3	I2SO_DATA
17	GPIO2	GPIO2	I2SO_WS

Table6-2: I2S pin share scheme

6.4 UART

WG229 Pin Number	Pin Name	GPIO	Function Name
21	RXD0	GPIO3	U0RXD
22	TXD0	GPIO1	U0TXD
16	MTDO	GPIO15	U0RTS
7	MTCK	GPIO13	U0CTS
17	GPIO2	GPIO2	U1TXD
13	SD_D1	GPIO8	U1RXD

Table6-3: UART pin share scheme

6.5 SDIO

WG229 Pin Number	Pin Name	GPIO	Function Name

11	SD_D2	GPIO9	SD_D2
12	SD_D3	GPIO10	SD_D3
9	SD_CMD	GPIO11	SD_CMD
14	SD_CLK	GPIO6	SD_CLK
10	SD_D0	GPIO7	SD_D0
13	SD_D1	GPIO8	SD_D1

Table6-4: SDIO pin share scheme

6.6 SPI(Master/Slave)

WG229 Pin Number	Pin Name	GPIO	Function Name
11	SD_D2	GPIO9	SPIHD
12	SD_D3	GPIO10	SPIWP
9	SD_CMD	GPIO11	SPICS0
14	SD_CLK	GPIO6	SPI_CLK
10	SD_D0	GPIO7	SPIQ/NISO
13	SD_D1	GPIO8	SPID/MOSI
22	TXD0	GPIO1	SPICS1
18	IO0	GPIO0	SPICS2

Table6-5: SPI pin share scheme

6.7 SPI(Slave)

WG229 Pin Number	Pin Name	GPIO	Function Name
11	SD_D2	GPIO9	NC
12	SD_D3	GPIO10	SPIS_CS
9	SD_CMD	GPIO11	SPIS_MOSI
14	SD_CLK	GPIO6	SPIS_CLK
10	SD_D0	GPIO7	SPIS_MISO
13	SD_D1	GPIO8	SPIS_INT

Table6-6: SPI Slave pin share scheme

6.8 HSPI(Slave)

WG229 Pin Number	Pin Name	GPIO	Function Name
5	MTMS	GPIO14	HSPICLK

17	GPIO2	GPIO2	HSPIQ/MISO
7	MTCK	GPIO13	HSPID/MOSI
16	MTDO	GPIO15	HSPICS

Table6-7: HSPI pin share scheme

6.9 PWM

WG229 Pin Number	Pin Name	GPIO	Function Name
6	MTDI	GPIO12	PWM0
16	MTDO	GPIO15	PWM1
5	MTMS	GPIO14	PWM2
19	IO4	GPIO4	PWM3

Table6-8: PWM pin share scheme

6.10 IR Remote

WG229 Pin Number	Pin Name	GPIO	Function Name
5	MTMS	GPIO14	IR TX
20	IO5	GPIO5	IR RX

Table6-9: IR pin share scheme

7 PCB Footprint and Dimensions

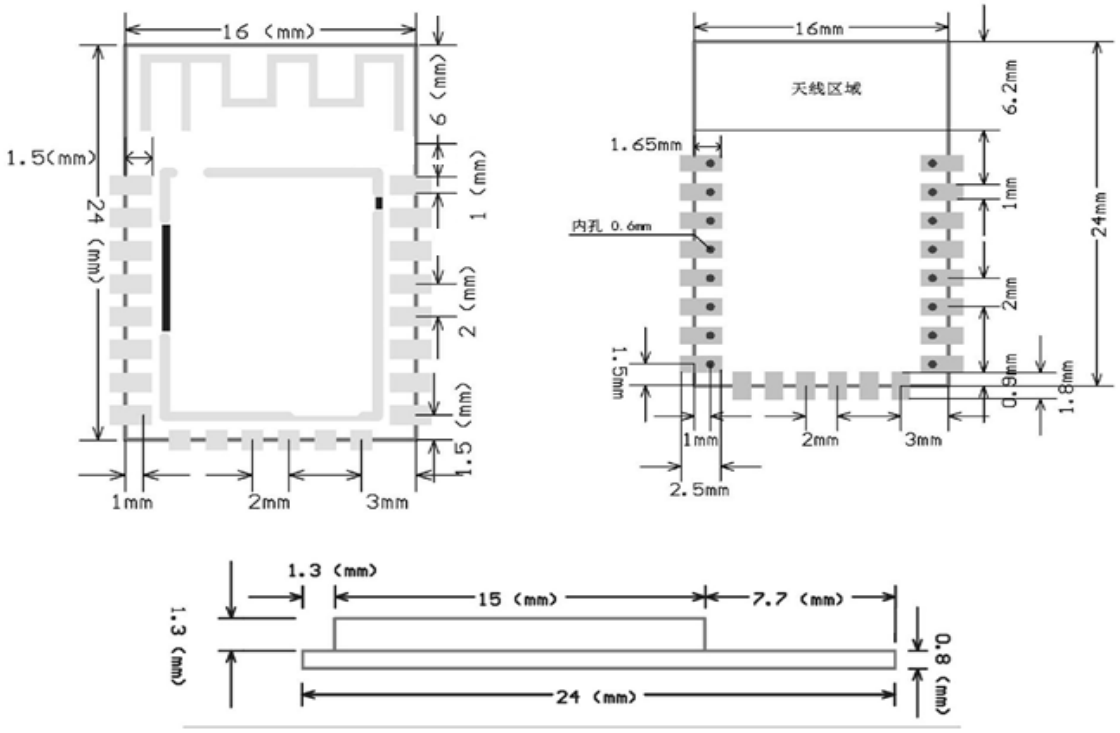

Figure 4: WG229 Recommend PCB Footprint

8 Electrical Characteristics

8.1 Absolute Maximum Ratings

Parameter	Condition	Min.	Typ.	Max.	Unit
Storage Temperature Range		-40		125	°C
ESD Protection	VESD	/		2000	V
Supply Voltage	VDD33	0		3.6	V
Voltage On Any I/O Pin		-0.3		3.63	V

Table8-1: Absolute Maximum Ratings

Note: Absolute maximum ratings are stress ratings only, and functional operation at the maxims is not guaranteed. Stress beyond the limits specified in this table may affect device reliability or cause permanent damage to the device. For functional operating conditions, refer to the operating conditions tables as follow.

* series modules are Electrostatic Sensitive Devices and require special precautions while handling.

ESD precautions

The series modules contain highly sensitive electronic circuitry and are Electrostatic Sensitive Devices (ESD). Handling the series modules without proper ESD protection may destroy or damage them permanently.

The series modules are electrostatic sensitive devices (ESD) and require special ESD precautions typically applied to ESD sensitive components. Proper ESD handling and packaging procedures must be applied throughout the processing, handling, transportation and operation of any application that incorporates the series module. Don't touch the module by hand or solder with non-anti-static soldering iron to avoid damage to the mode.

8.2 Recommended Operation Ratings

Parameter	Symbol	Min.	Typ.	Max.	Unit
Extended temp. range	TA	-20		70	ºC
Power Supply	VDD33	3.0	3.3	3.6	V
Input Low Voltage	VIL	-0.3		0.8	V
Input High Voltage	VIH	2		3.6	V

Table8-2: Operating Conditions

8.3 Measurement Conditions

System State	Description	Current (Typ.)@3.3V
Deep-sleep	Only RTC Power on	10uA

Light-sleep	Receive Beacon packages	0.9mA
Modem-sleep	The CPU is Power on	15 mA
Active RX(RF Working)	RX and Listening	50-60 mA
Active TX(RF Working)	WIFI TX 13-18dBm	120-180 mA

Table8-3:WG229 Power Consumption in Different States

9. Performance Specification

Hardware Features	
Model	
ANTENNA TYPE	PCB Antenna or IPEX Connector
Voltage	3.3V+/-10%
DIMENTIONS(L×W×H)	24.0mm*16.0mm*2.2mm
2.4GHz WiFi Features	
WIRELESS STANDARDS	IEEE 802.11 b/g/n/
FREQUENCY RANGE	2.412-2.484GHz
DATA RATES	IEEE 802.11a Standard Mode: 6,9,12,18,24,36,48,54Mbps IEEE 802.11 b Standard Mode: 1,2,5.5,11Mbps
	IEEE 802.11g Standard Mode: 6,9,12,18,24,36,48,54Mbps
	IEEE 802.11n Standard Mode: 72.2Mbps @ HT20(MCS7)
2.4G RECEIVE SENSITIVITY	HT20 MCS7 : -70dBm@10% PER(MCS7)
	OFDM 54M: -73dBm@10% PER
	CCK, 11M: -88dBm@ 8% PER
WIRELESS SECURITY	Supports WEP64/128, WPA, WPA2, TKIP, WAPI, and AES hardware encryption
WIRELESS TRANSMIT POWER **With ±2dBm tolerance**	IEEE 802.11n: 12-14dBm@HT20 MCS7
	IEEE 802.11g: 16dBm

	IEEE 802.11b: 18dBm
WORK MODE	Soft AP/ Station/Soft AP+Station
Others	
ENVIRONMENT	Operating Temperature: -20℃~70℃
	Storage Temperature: -40℃~125℃
	Operating Humidity: 10%~90% non-condensing
	Storage Humidity: 5%~90% non-condensing

10 Reference Schematics

10.1 Power Schematic

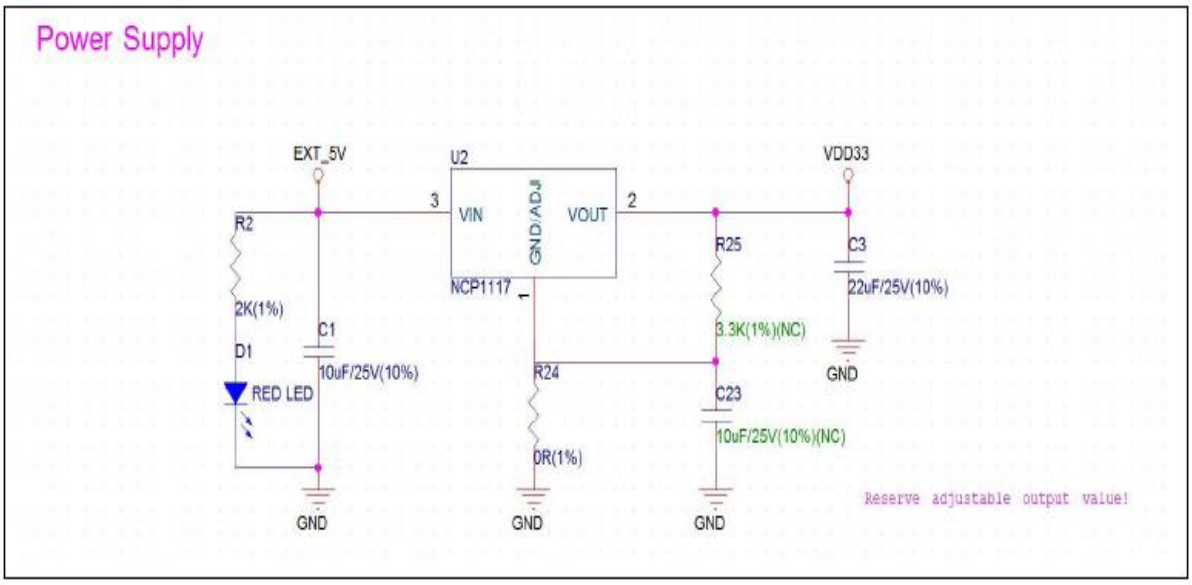

Figure 5: WG229 Typical Power Schematics

10.2 USB-UART Schematic

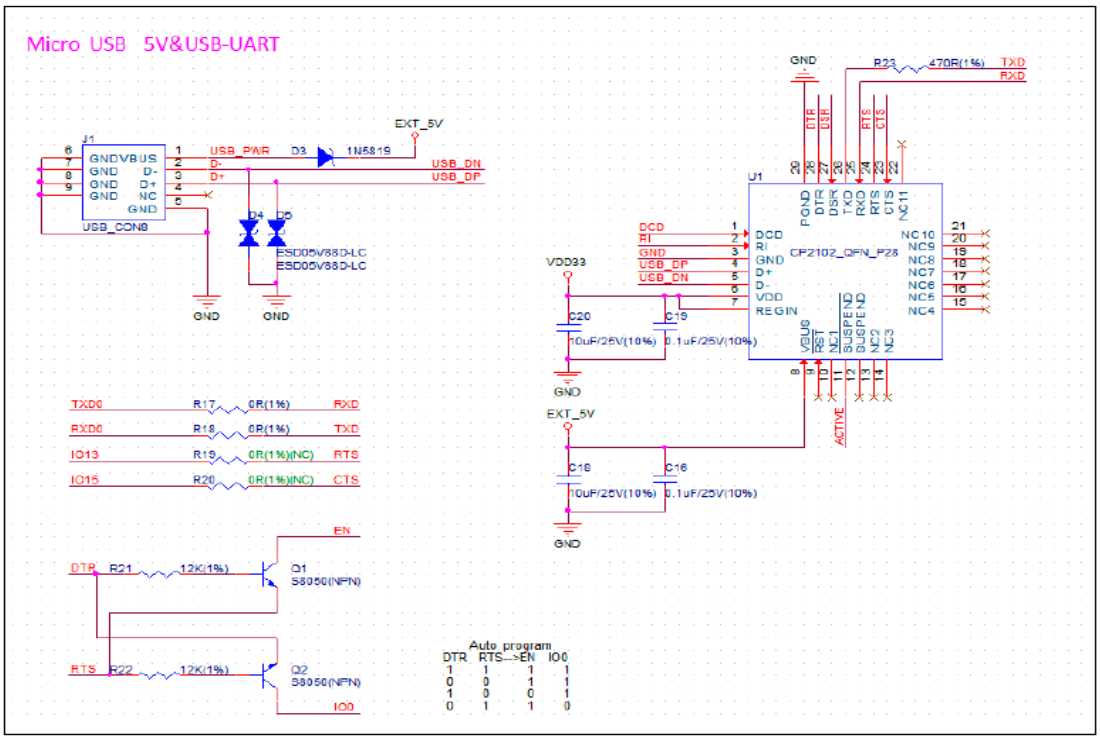

Figure 6: WG229 Typical USB to UART Schematics

10.3 Typical Schematic

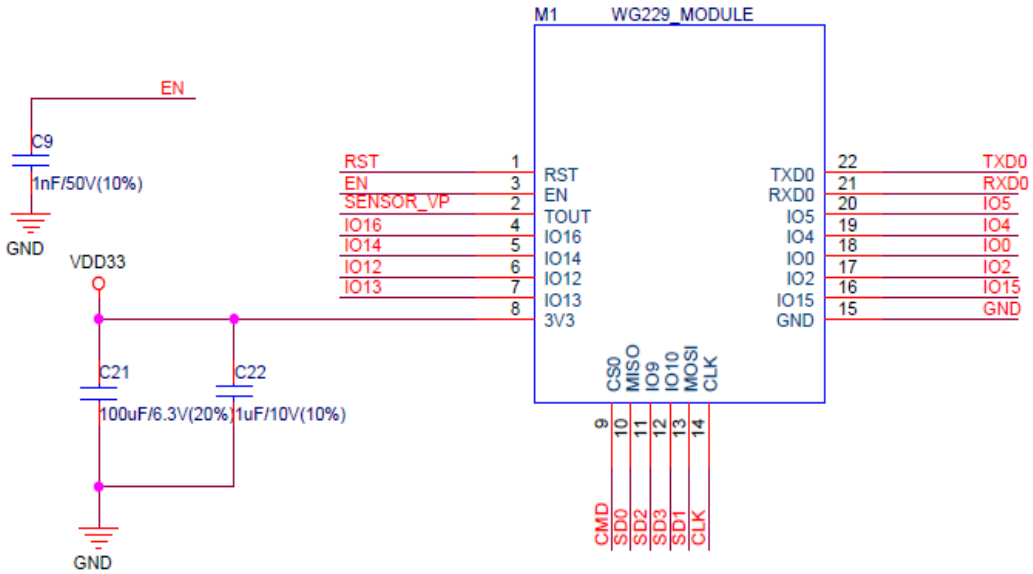

Figure 7: WG229 Typical Schematics

11 Hardware Boot Mode

Boot Mode.	MTDO/IO15	GPIO0	GPIO2
Download Mode	0	0	1
Normal Work Mode	0	1	1

Download Mode

When GPIO15=0, GPIO0=0, GPIO2=1, is in the Download mode and you can download the firmware to the external flash.

Normal Work Mode

When GPIO15=0, GPIO0=1, GPIO2=1, is in the Flash mode. will automatically read and run programs from flash during power-on.

12 Manufacturing Process Recommendations

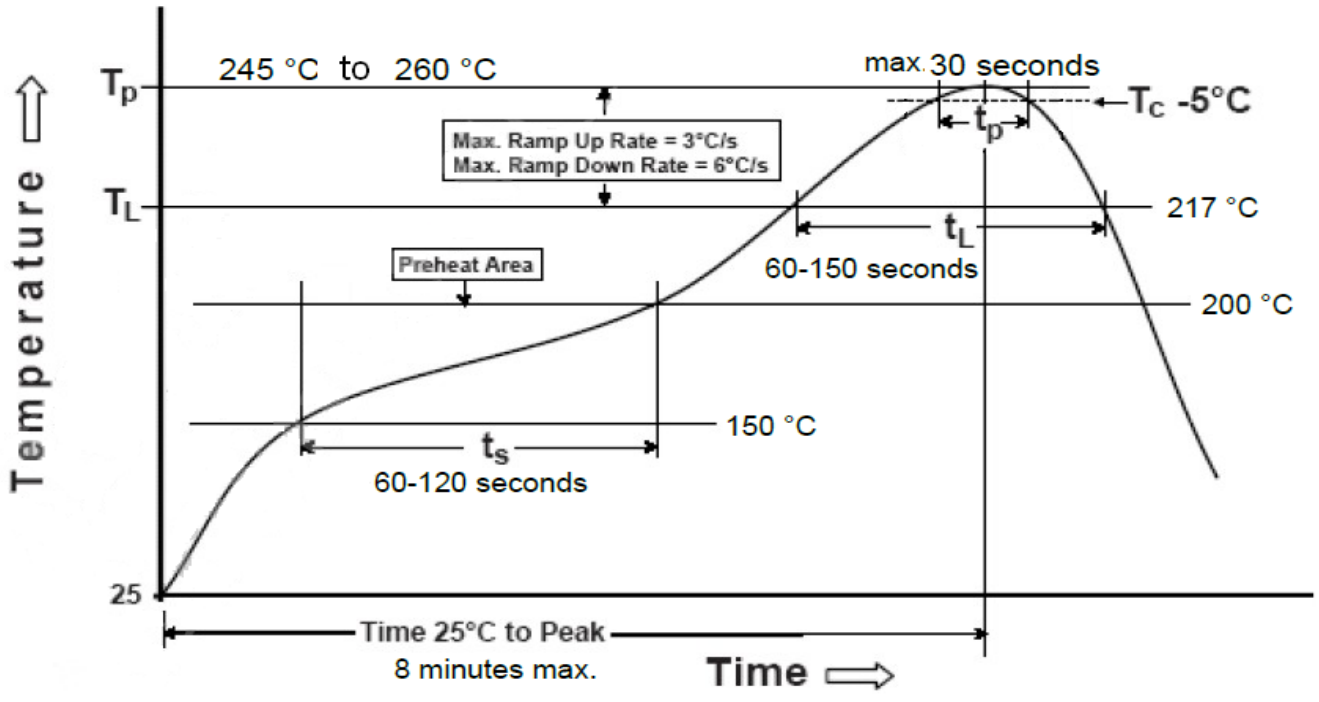

Figure 8: WG229 Typical Lead-free Soldering Profile

Note： The final soldering temperature chosen at the factory depends on additional external factors like choice of soldering paste，size，thickness and properties of the baseboard，etc. Exceeding the maximum soldering temperature in the recommended soldering profile may permanently damage the module.

13 Ordering Information

Module No.	Antenna Connector Type
WG229-E	IPEX Connector
WG229-P	PCB Antenna

Figure9: WG229-E

Figure9: WG229-P

14 Packaging Specification

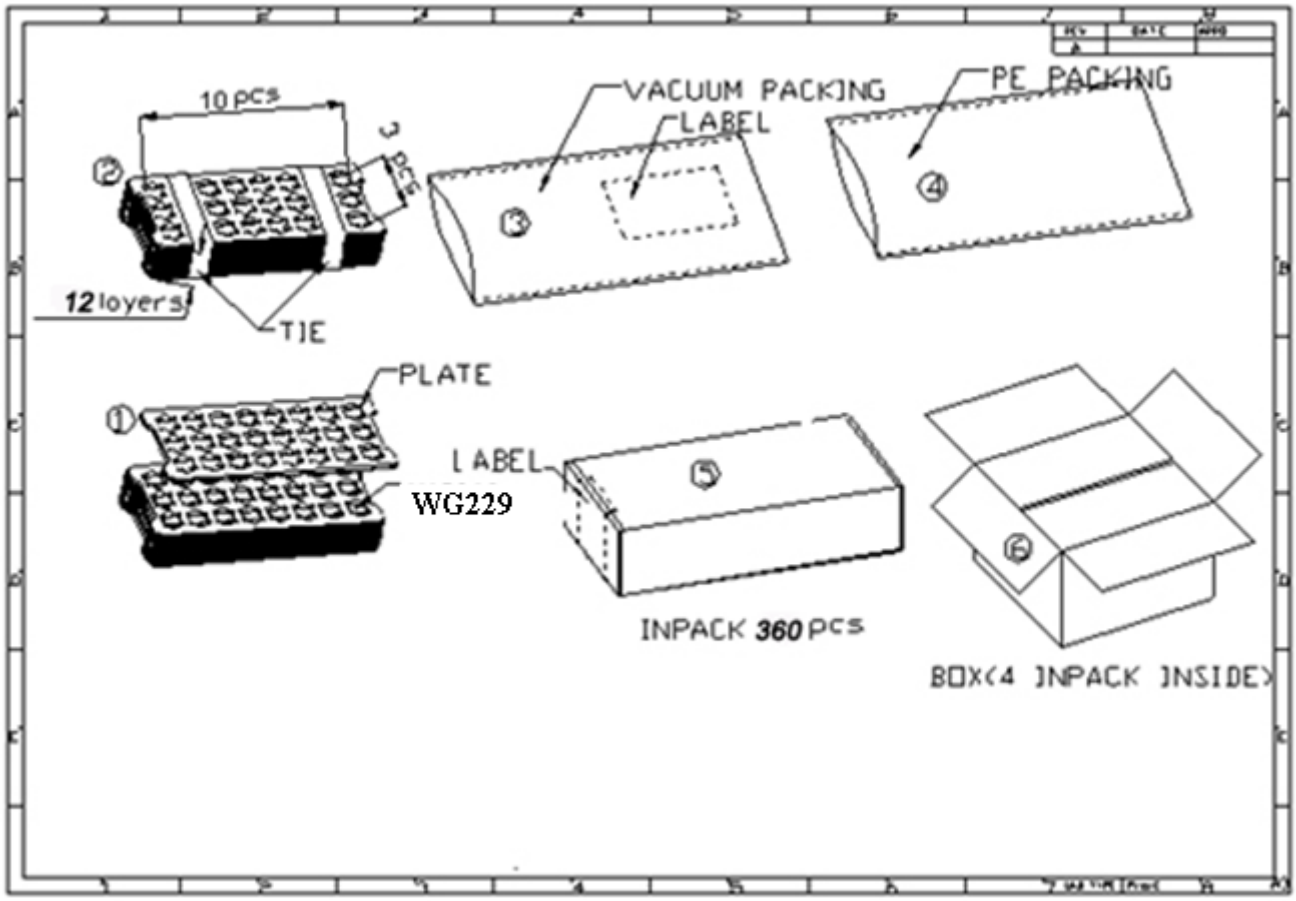

15 Revision History

Revision	Description	Approved	Date
V1.01	Initial Release	George He	2019.03.25
V1.02	Replace prdouct physical picture	George He	2019.08.13

16 Contact Information

Skylab M&C Technology Co., Ltd.

深圳市天工测控技术有限公司

Address: 6 Floor, No.9 Building, Lijincheng Scientific & Technical park, Gongye East Road, Longhua District, Shenzhen, Guangdong, China

Phone: 86-755 8340 8210（Sales Support）

Phone: 86-755 8340 8510（Technical Support）

Fax: 86-755-8340 8560

E-Mail: sales1@skylab.com.cn

Website: www.skylab.com.cn www.skylabmodule.com